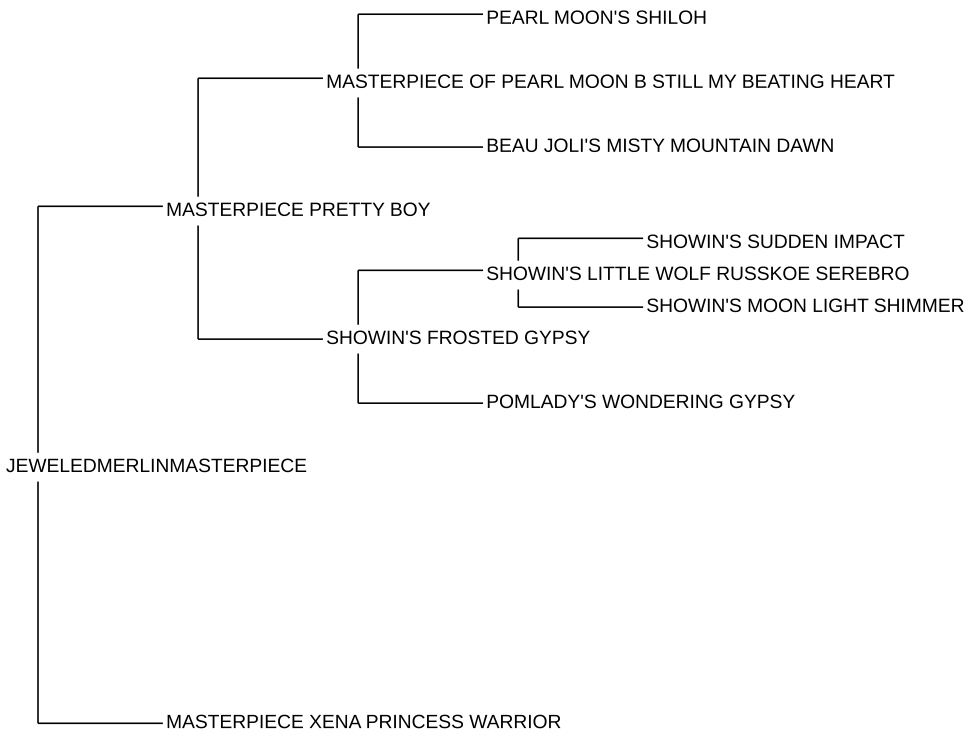

JEWELED PHOENIX

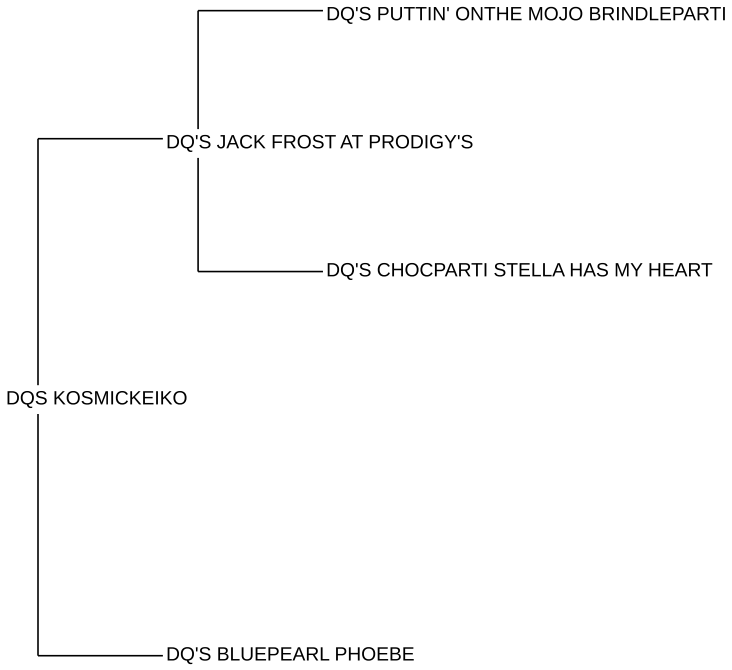

Generated by https://Pompedigrees.Online